FLUID POWERED DOSING PUMPS FOR

Irrigation

FERTILIZER/NUTRIENTS

WATER TREATMENT

PESTICIDES

pH CONTROL

DOSATRON®

WATER POWERED DOSING TECHNOLOGY

Here's How It Works . . .

The Dosatron pulls up solution like a syringe, drawing in the concentrate with the plunger. On the down stroke, the concentrate is displaced into the body of the Dosatron, where it mixes with the incoming water. Then just the right amount of fertilizer is discharged into the water line.

Dosatron fertilizer injectors are:

- Water-powered, non-electric
- Accurate regardless of variations in flow and pressure
- Easy to adjust
- Consistent with low pressure loss and provide a precisely blended solution

HOW IT WORKS

800-523-8499 • www.dosatronusa.com

The Dosatron Difference

Dosatron units feature superior engineering to create the most durable, easy-to-use, low-maintenance product on the market. We manage your chemical application through repeatability, regardless of fluctuations in pressure or flow. Dosatron also supports you every step of the way with world-class customer service. Trust only genuine Dosatron products.

Dosatron Injectors Accurately Inject:

- **Fertilizers**
- **Nutrients**
- **Organics**
- **Beneficials**
- **Fish Emulsion**
- **Teas**
- **Herbicides**
- **Plant Growth Regulators (PGRs) for Drenching**
- **Chlorine**
- **Insecticides**
- **Fungicides**
- **Algicides**
- **Acids**
- **Wetting Agents**
- **Sanitizers** (special models available)
- **Nematodes**

flowers to food

greenhouse to field

11 GPM

D25F1
Ratio: Fixed at 1:100

D25RE2
Ratio: 1:500 to 1:50

D25RE09
Ratio: 1:1000 to 1:112

Pipe Size: 3/4” NPT

Size: 14” high x 6 1/4” wide

Weight: 4 lbs

Bypass: Optional

14 GPM

D14MZ2
Ratio: 1:500 - 1:50

Pipe Size: 3/4” NPT

Size: 19 1/8” high x 6 5/16” wide

Weight: 6 lbs

D14MZ10
Ratio: 1:100 to 1:10

Pipe Size: 3/4” NPT

Size: 19 1/8” high x 6 5/16” wide

Weight: 6 lbs

D14MZ3000
Ratio: 1:3000 to 1:333

Pipe Size: 3/4” NPT

Size: 21” high x 6 5/16” wide

Weight: 6 lbs

D14MZ520
Ratio: 1:20 to 1:5

Pipe Size: 3/4” NPT

Size: 26 1/8” high x 10 1/4” wide

Weight: 8.8 lbs

Bypass: Optional

100 GPM

D20S
Ratio: 1:500 to 1:50

Pipe Size: 2” NPT

Size: 55” high x 15” wide (with legs)
42” high x 15” wide (no legs)

Weight: 47 lbs

Bypass: Standard

Accessories included:
Mounting bracket or legs, suction hose with weighted strainer, and operating manual.

Recommended:
- 200 mesh filter
- check valve
- pressure regulator
- flow restrictor
- water hammer arrestor kits

DOSATRON
INJECTORS
800-523-8499 • www.dosatronusa.com

20 GPM

D45RE15

Ratio: 1:500 to 1:66

Pipe Size: 1” NPT

Size: 24” high x 7 1/2” wide

Weight: 8 lbs

Bypass: Standard

40 GPM

D40MZ2

Ratio: 1:500 to 1:50

Pipe Size: 1 1/2” NPT

Size: 25 1/4” high x 8 1/2” wide

Weight: 12 lbs

D40MZ3000

Ratio: 1:3000 to 1:500

Pipe Size: 1 1/2” NPT

Size: 25 1/4” high x 8 1/2” wide

Weight: 12 lbs

D40MZ5

Ratio: 1:100 to 1:20

Pipe Size: 1 1/2” NPT

Size: 25 5/16” high x 8 1/2” wide

Weight: 12 lbs

Bypass: Optional

132 GPM

D132MZ1

Ratio: 1:1,000 to 1:100

Pipe Size: 3” NPT

Size: 36 3/4” x 25 11/16” x 8 13/16”

Weight: 33 lbs

Bypass: Optional

D132WL5000

Ratio: 1:5,000 to 1:500

Pipe Size: 3” NPT

Size: 36 3/4” x 25 11/16” x 8 13/16”

Weight: 33 lbs

Bypass: Optional

D132WL30000

Ratio: 1:30,000 to 1:3,000

Pipe Size: 3” NPT

Size: 36 3/4” x 25 11/16” x 8 13/16”

Weight: 33 lbs

Bypass: Optional

DosaCart

Part #: HS15-16

Includes:
- Large 15-gallon tank
- Crash bar
- Clean-out valve

Accommodates:
- 11 GPM
- 14 GPM
- 20 GPM
- 40 GPM

Quick Hook-Up kits available:
- 11 GPM, 14 GPM - Part #: HSPK58
- 20 GPM - Part #: HSPKD45

DosaCart, Dosatron injector, and Quick Hook-Up kit are each sold separately.

Li'l Bud-D

Part #: HS15-5

Includes:
- Cart
- 5-gallon bucket with lid

Accommodates:
- 11 GPM
- 14 GPM

Quick Hook-Up kit available:
- 11 GPM, 14 GPM - Part #: HSPK58LB

Li'l Bud-D, Dosatron injector, and Quick Hook-Up kit are each sold separately.

Eco-Cart

Portable Fertilization System

The 5-gallon Eco-Cart provides quick and easy proportional on-demand dispensing, for a great value.

Eco-Cart - 14 GPM (Part #: HSECO-D14MZ2) includes:
- Cart
- 5-gallon bucket with lid
- Dosatron D14MZ2
- Plumbing

Eco-Cart - 11 GPM (Part #: HSECO-D25F1) includes:
- Cart
- 5-gallon bucket with lid
- Dosatron D25F1 (fixed 1:100)
- Plumbing

Eco-Cart (Part #: HSECO) includes:
- Cart
- 5-gallon bucket with lid
- Plumbing

DosaCarts

Perfect for Garden Centers

Simply the easiest and most convenient way to fertilize and treat your plants while you water. DosaCarts provide proportional on-demand dispensing, polyethylene construction, 10" no flat tires, and narrow width for maximum mobility.

Goes where you need, to keep your profits blooming!

PORTABLE
FERTILIZER INJECTORS

800-523-8499 • www.dosatronusa.com

Standard Bypass Installation

For wall mounting. Can also be controlled automatically with solenoid valves.

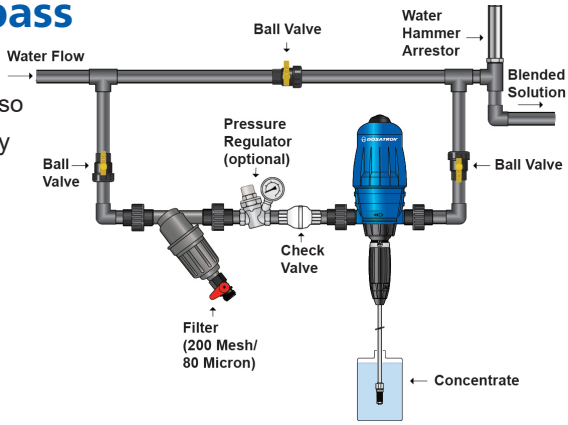

Series Installation

Allows injection for multiple solutions.

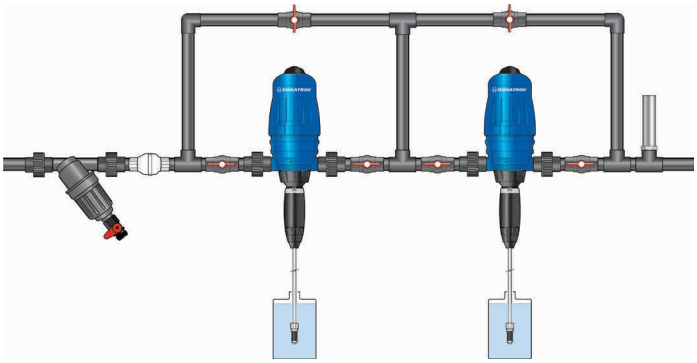

Parallel Installation

Increase water flow capacity by installing injectors in parallel.

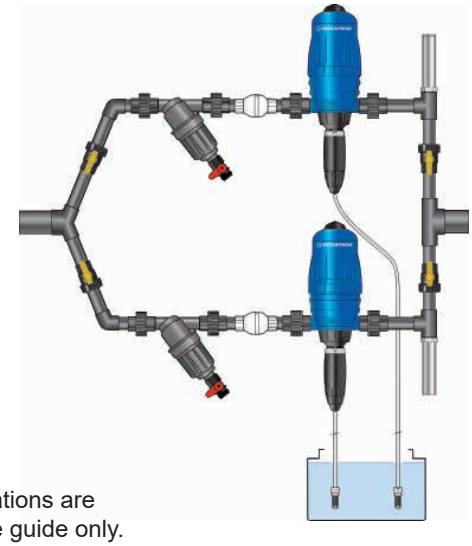

NOTE: Installation illustrations are to be used as a reference guide only.

Filter (200 mesh/80 micron)

Provides protection from debris in water lines

Check Valve

Reduces effects of water hammer

Flow Restrictor

Controls and manages water flow

Pressure Regulator

Controls and manages water pressure

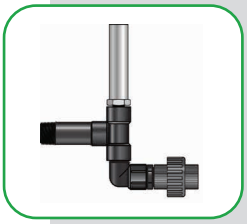

Water Hammer Arrestor Kits

Controls effects of water hammer. See our kit options on page 8

Mini Maintenance Kits

Perfect solution for users and growers who perform maintenance on a regular schedule. Scan the QR code to find out more.

INSTALLATIONS AND ACCESSORIES

GARDEN CENTER

1. **Living Walls**
2. **Drip Irrigation**
3. **Portable Fertilizer Injectors**
   - DosaCart
   - Li'l Bud-D
   - Eco-Cart
4. **3-Part Solution A/B/C Tank**
5. **Watering Boom**
   - Pesticides
   - Fertilizers
6. **Foaming**
7. **High Water Flow System**
   - pH Control

NOTE: Installation illustrations are to be used as a reference guide only.

INSTALLATIONS

GREENHOUSE FIELD IRRIGATION

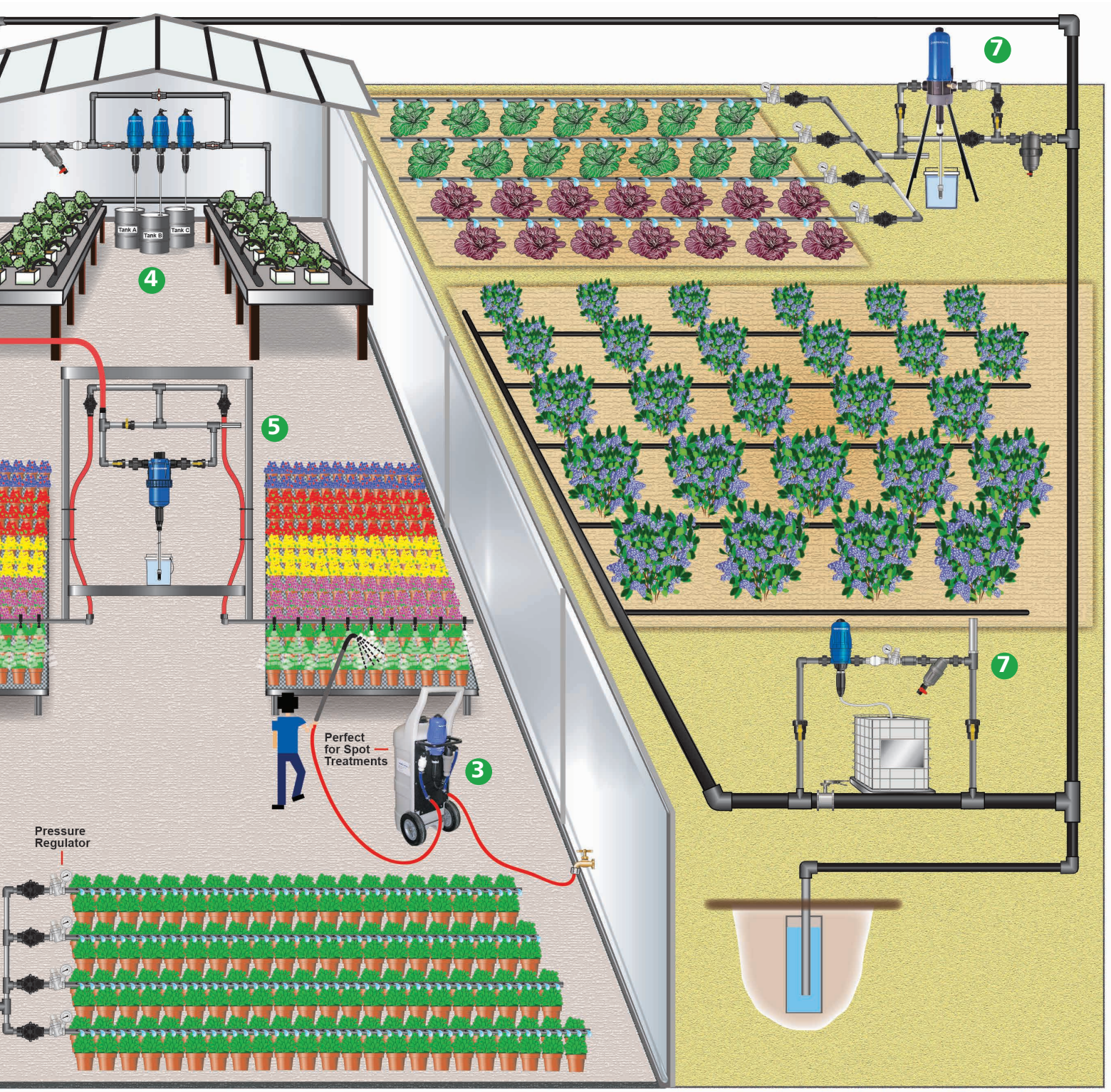

DOSATRON IS EVERYWHERE

NUTRIENT DELIVERY SYSTEM

The **Nutrient Delivery System** panel was designed with every type of grower in mind. Simple to set-up and easy to operate, this modular proportional nutrient dispensing system delivers precise results every time, regardless of fluctuations in pressure or flow. With the ability to customize the panel, based on your nutrient program, the Nutrient Delivery System is flexible enough to fit into every grower's fertigation system and works well with various types of irrigation. Whether using the drain-to-waste method or a recirculating system using reservoirs, the end result is the same – eliminate the need to measure & pour and **automate your feeding schedule**!

Features:

- Nutrient Doser
- Constant EC/pH Monitoring
- Eliminate Reservoir
- Easy to Use and Simple to Maintain
- Customize to Your Specific Needs
- Automated Irrigation Timer

Nutrient Delivery System Kits Are Simple To Set Up, Maintain and Operate

Starter Kit — It includes all the parts you need to get started, from ball valves to Teflon® tape.
Part #: HYKSTART

Mixing Chamber Kit — Enhances blending as the solution passes through.
Part #: HYKMC34

Monitor Kit — Includes a special in-line nutrient monitor that measures and displays your well-blended outgoing solution.
Part #: HYKMON

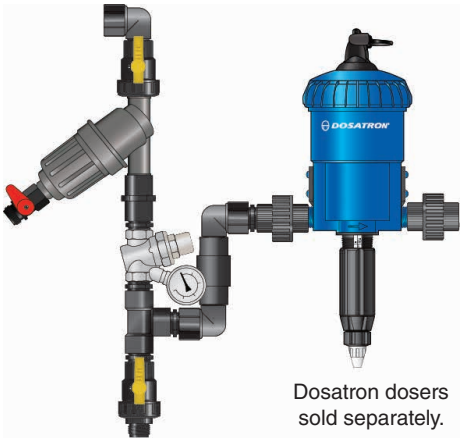

Dosatron dosers sold separately.

NOTE: Installation illustrations are to be used as a reference guide only.

Water Hammer Arrestor Kits

WATER HAMMER ARRESTOR KITS		
PIPE SIZE	**DESCRIPTION**	**PART #**
3/4"	3/4" MPT X 6 1/2" TALL	WHA34-SS-KIT
1"	1" MPT X 6 15/16" TALL	WHA100-SS-KIT
1 1/2"	1" MPT X 10 9/16' TALL	WHA150-SS-KIT
2"	1" MPT X 11 3/16" TALL	WHA200-SS-KIT

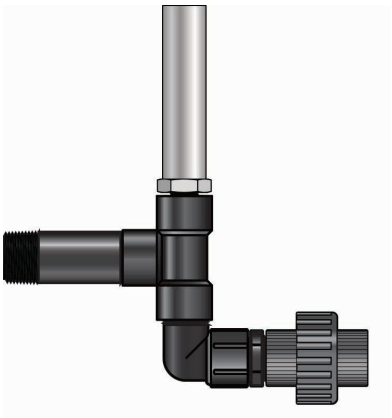

SPECIFICATIONS

MODEL	MAX. FLOW RATE	MAX. CLICKS IN 15 SECONDS	FLOW RANGE	PRESSURE RANGE	RATIOS	PERCENT
D14MZ520	9 GPM	31	0.05 - 9 GPM	7 - 57 PSI	1:20 - 1:5	5% - 20%
D25F1	**11 GPM**	**46**	**0.05 - 11 GPM**	**4.3 - 85 PSI**	**1:100 fixed**	**1% fixed**
D25RE2	11 GPM	46	0.05 - 11 GPM	4.3 - 85 PSI	1:500 - 1:50	0.2% - 2%
D25RE09	11 GPM	46	0.05 - 11 GPM	4.3 - 85 PSI	1:1000 - 1:112	0.1% - 0.9%
D14MZ2	**14 GPM**	**49**	**0.05 - 14 GPM**	**4.3 - 85 PSI**	**1:500 - 1:50**	**0.2% - 2%**
D14MZ10	14 GPM	49	0.05 - 14 GPM	7 - 85 PSI	1:100 - 1:10	1% - 10%
D14MZ3000	14 GPM	49	0.05 - 14 GPM	4.3 - 85 PSI	1:3000 - 1:333	0.03% - 0.3%
D45RE15	**20 GPM**	**45**	**0.4 - 20 GPM**	**7 - 70 PSI**	**1:500 - 1:66**	**0.2% - 1.5%**
D40MZ2	**40 GPM**	**36**	**2.2 - 40 GPM**	**4.3 - 116 PSI**	**1:500 - 1:50**	**0.2% - 2%**
D40MZ3000	40 GPM	36	2.2 - 40 GPM	4.3 - 116 PSI	1:3000 - 1:500	0.03% - 0.2%
D40MZ5	40 GPM	36	2.2 - 40 GPM	7.2 - 116 PSI	1:100 - 1:20	1% - 5%
D20S	**100 GPM**	**36**	**5 - 100 GPM**	**2 - 120 PSI**	**1:500 - 1:50**	**0.2% - 2%**
D132MZ1	132 GPM	46	35.2 - 132 GPM	7 - 87 PSI	1:1,000 - 1:100	0.1% - 1%
D132WL30000	132 GPM	46	35.2 - 132 GPM	7 - 87 PSI	1:30,000 - 1:3,000	0.003% - 0.03%
D132WL5000	132 GPM	46	35.2 - 132 GPM	7 - 87 PSI	1:5,000 - 1:500	0.02% - 0.2%

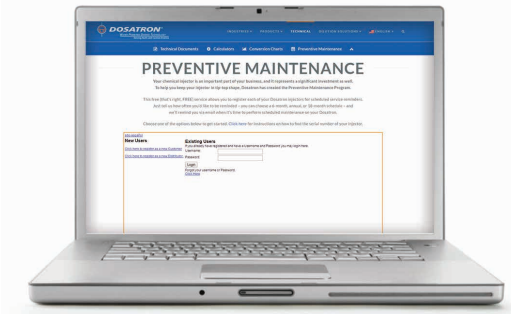

Scan for Free Preventive Maintenance

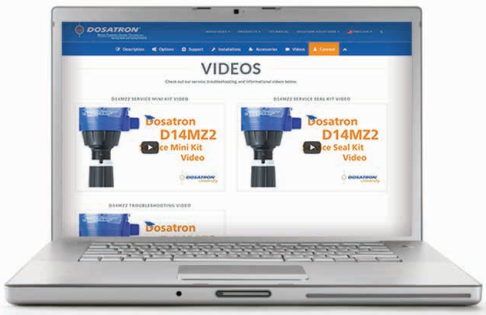

Scan for Service/Maintenance Videos

Scan for Technical Service Support

100 GPM in Parallel

20 GPM Mounted
(Cherry Creek Systems)

40 GPM Install
(Zwart Systems)

Dosatron injectors may be installed in parallel.

Dosatron injectors may be mounted on booms.

Dosatron injectors may be mounted on a wall, bench, or cart.

DOSATRON®

WATER POWERED DOSING TECHNOLOGY

Dosatron Sales and Service • North and Central America
2090 Sunnydale Blvd. • Clearwater, FL 33765 USA

Dosatron International, Inc. is proud to be an American owned company!

800-523-8499 • www.dosatronusa.com • 727-443-5404

Hablamos Español • Nous parlons Français

Dosatron International, Inc. is an industry leader in water-powered, proportional chemical injectors.
Dosatron products are manufactured according to ISO 9001:2000 and ISO 14001:2004 standards.

2020-12 KK A1100