SCHEMATICS

Dosatron Liquid Dispenser

Model # D45RE3 – 20 GPM

1:200 – 1:33

7 – 70 PSI

Suggested Installation:
200 mesh/80 micron water filter prior to unit
One-way check valve downstream from unit for water hammer protection

Suggested Maintenance Interval:
Replace injection seals every 12 months

DOSATRON SALES & SERVICE - NORTH & CENTRAL AMERICA
Dosatron International, Inc.
Phone: 727-443-5404 Service: (800) 523-8499
Fax: 727-447-0591
www.dosatronUSA.com

D45RE3

20 GPM - 1:200 - 1:33
7 - 70 psi

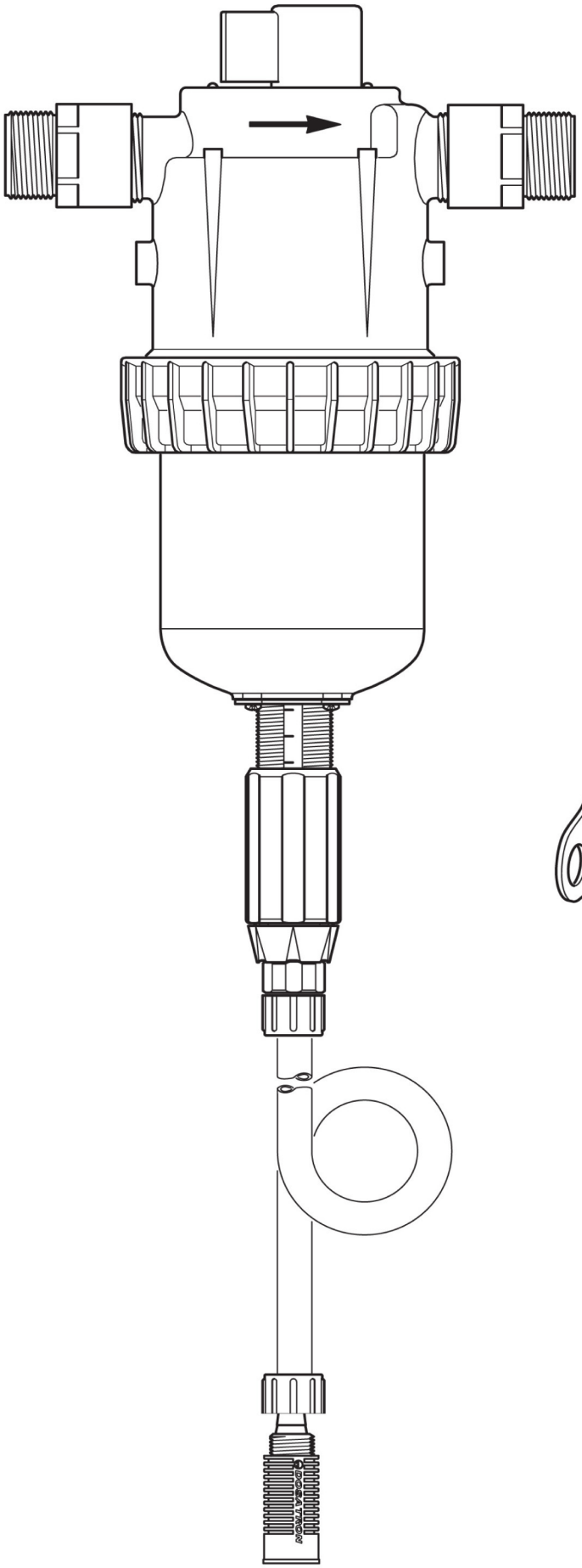

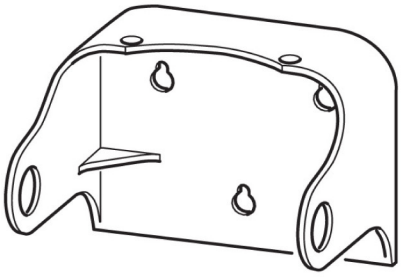

PJ084 Injection Seal Kit

D45RE3

20 GPM - 1:200 - 1:33
7 - 70 psi

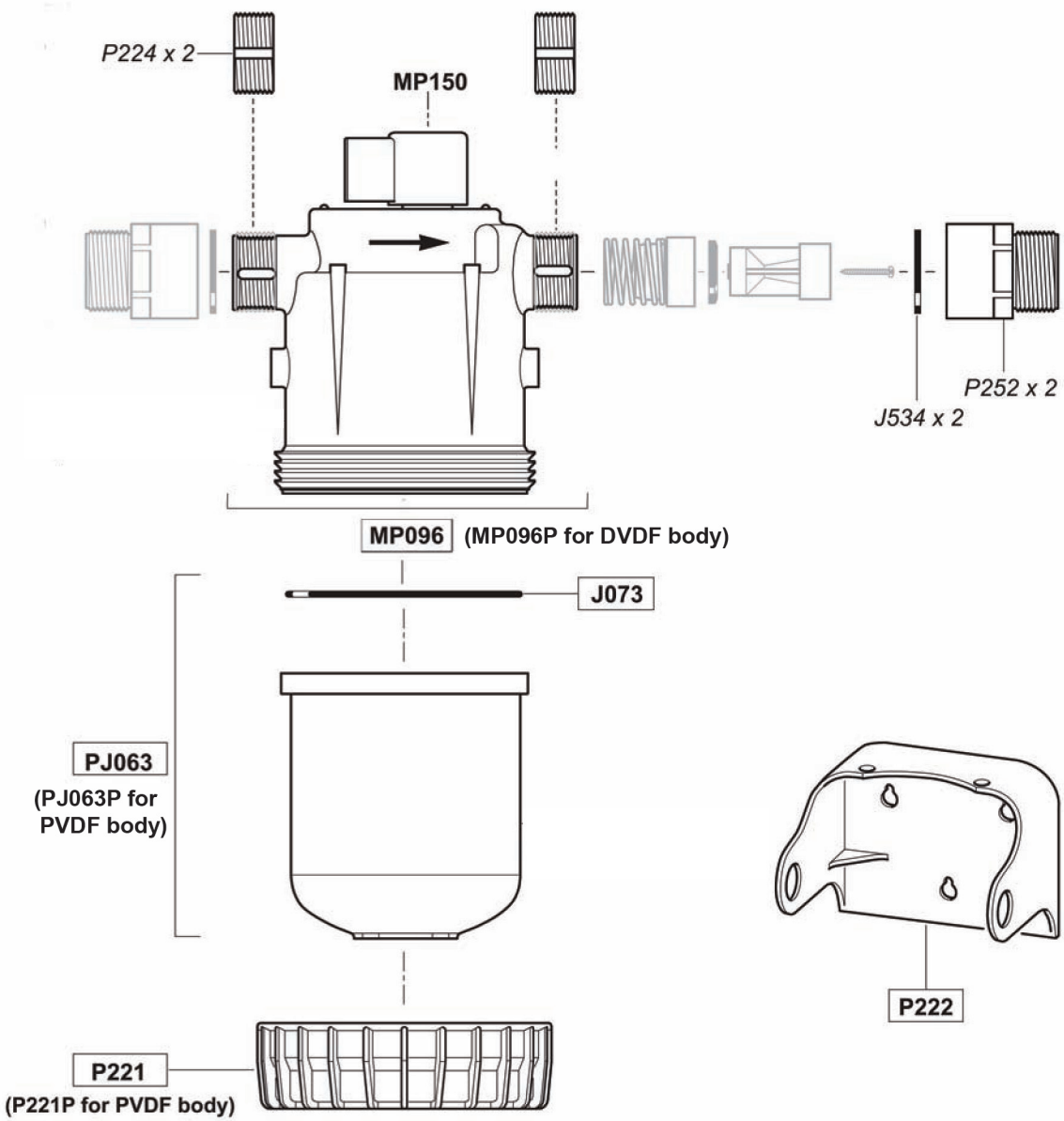

D45RE3

20 GPM - 1:200 - 1:33
7 - 70 psi

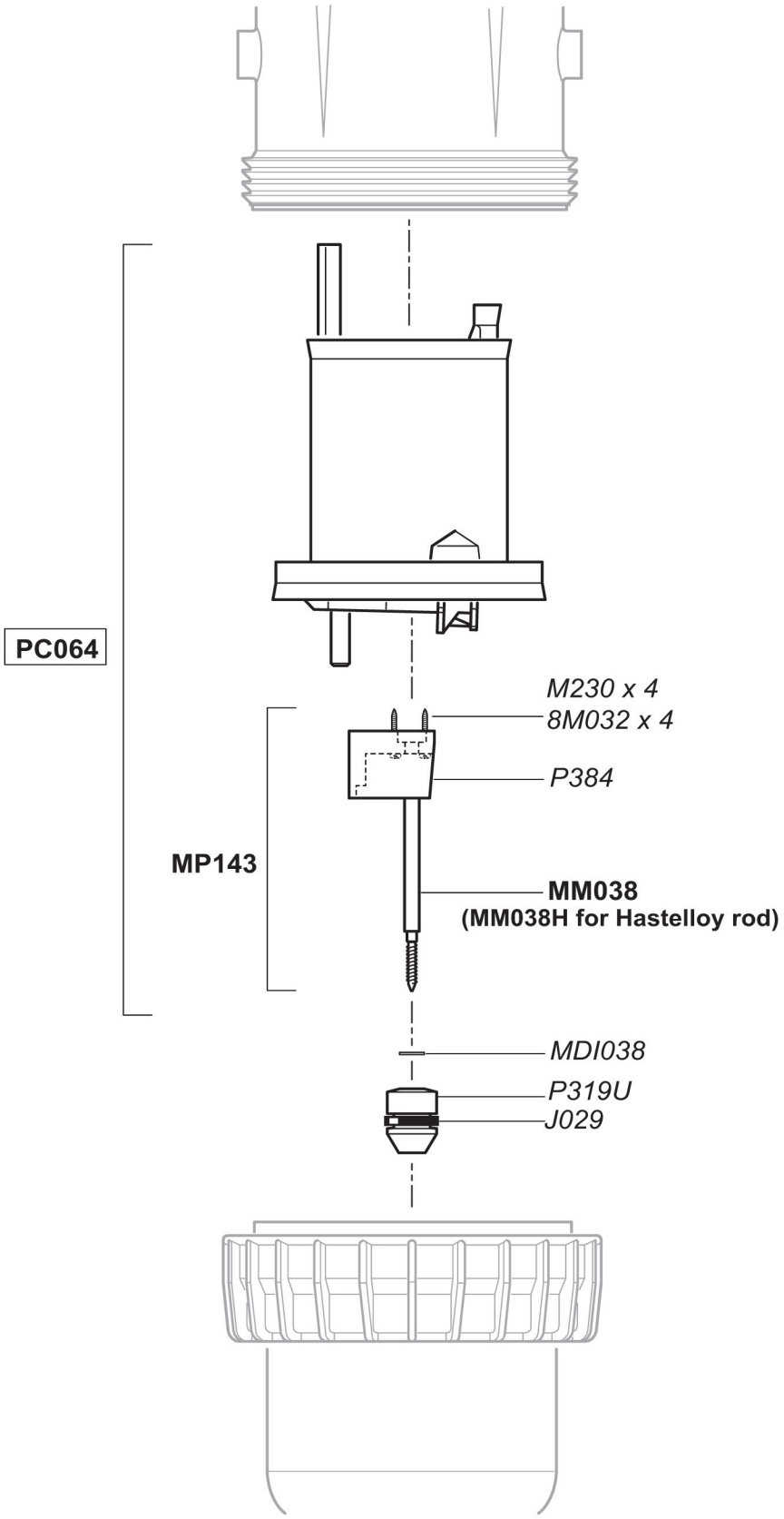

D45RE3

20 GPM - 1:200 - 1:33
7 - 70 psi

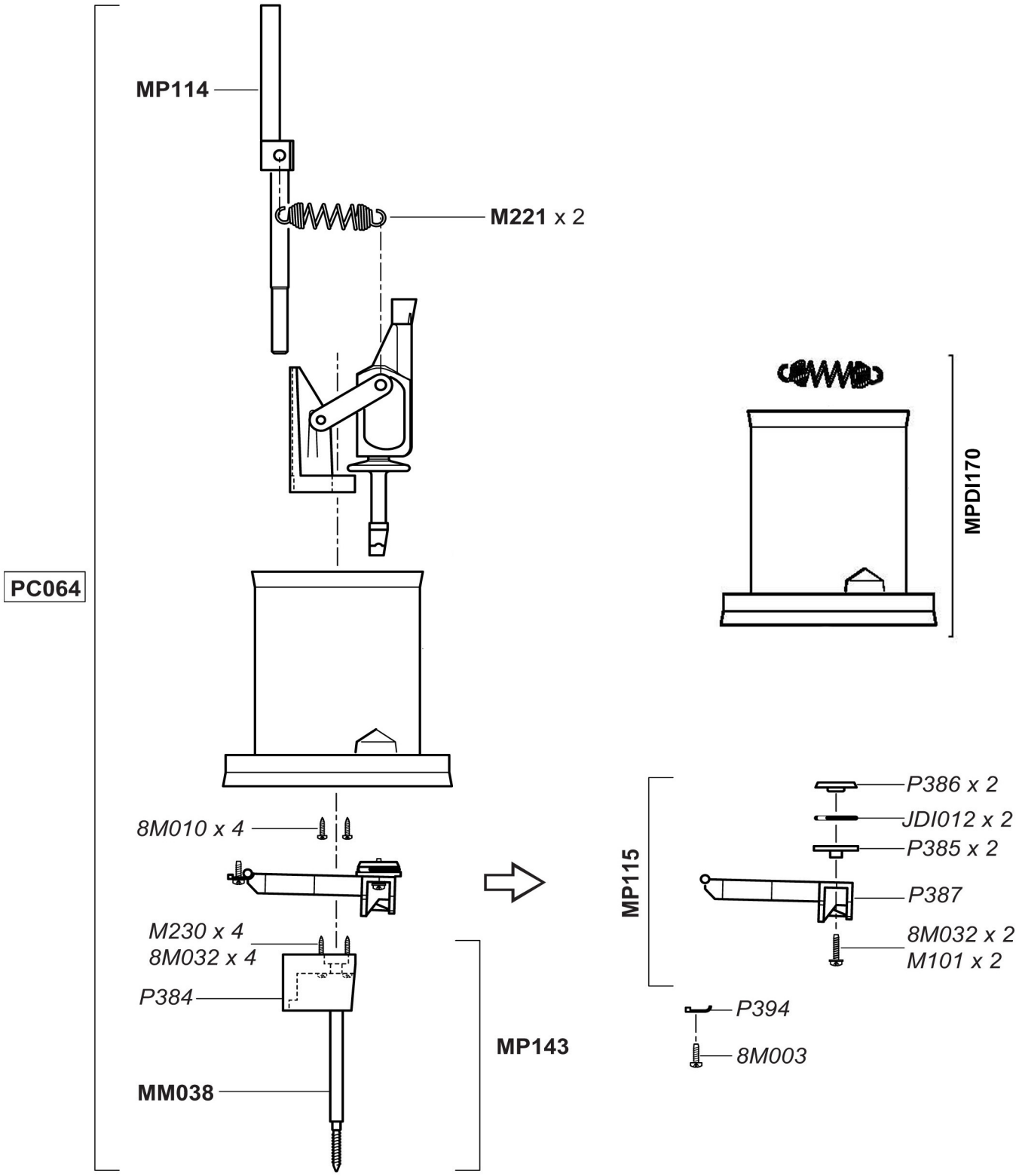

D45RE3

20 GPM - 1:200 - 1:33
7 - 70 psi

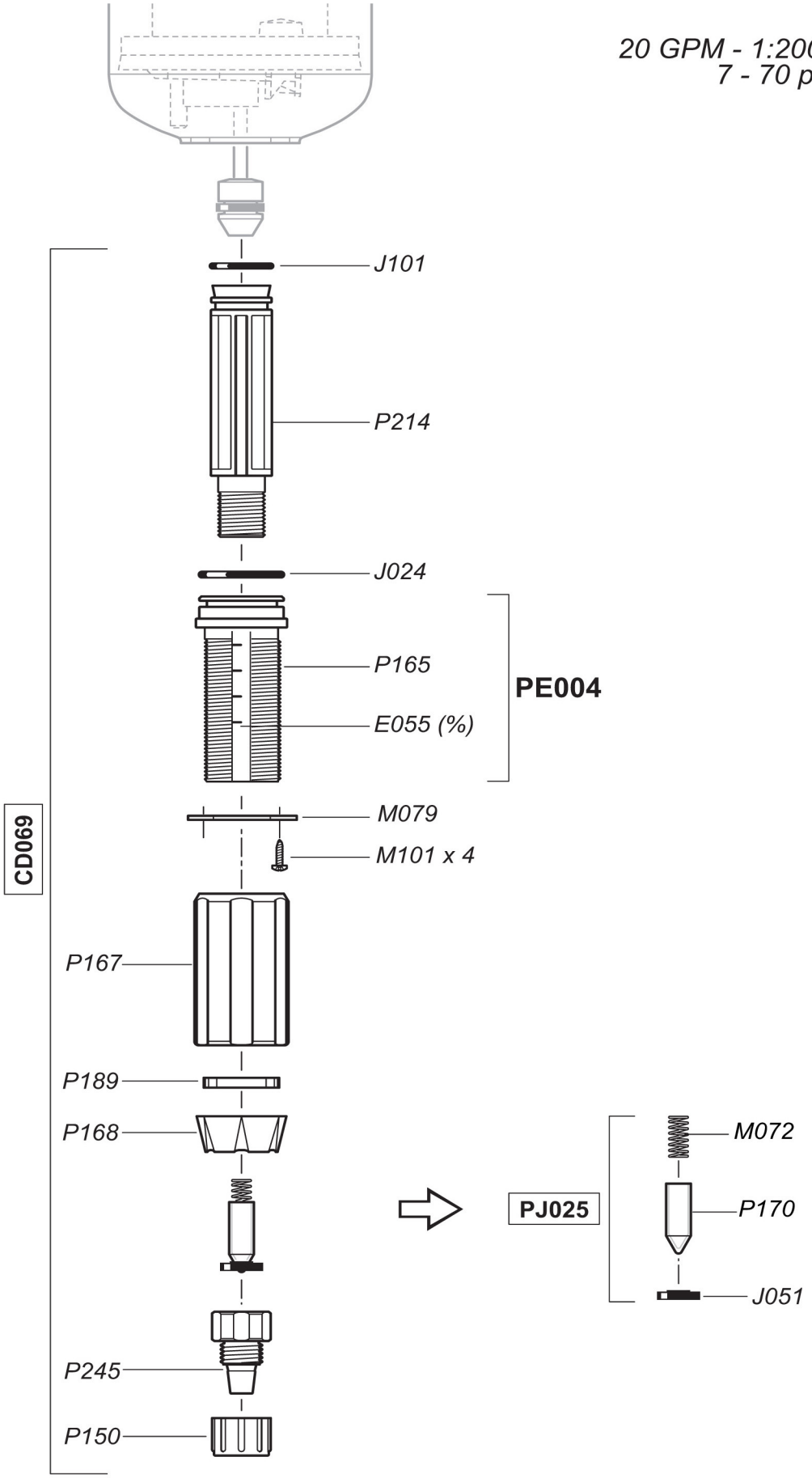

D45RE3
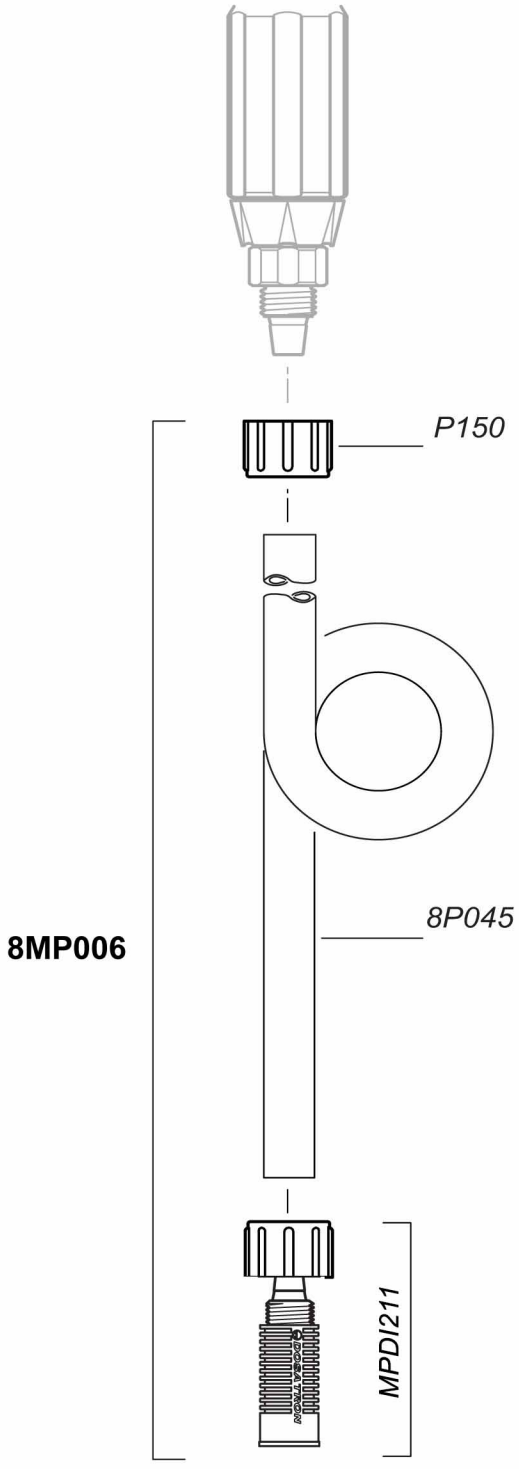
20 GPM - 1:200 - 1:33
7 - 70 psi